ASAP SPLIT (Blue) Ship March 17

Work Order ID 113173-2 *113173*

February-12-14 8:48:39 AM

(5)

Item ID: D3414-041 **Accept** *N900040100* **Setup Start** *NS1*

Revision ID: **Stop** *NS2*

Item Name: Lug

Start Date: 2/10/14 **Start Qty:** 24.00 *24* **Cust Item ID:**

Required Date: 2/10/14 **Req'd Qty:** 24.00 *24* **Customer:**

Reference:

Run Start *NR1*

Approvals: **Process Plan:** MLJ **Date:** 14-02-14 **Tooling:** **Date:**

Stop *NR2*

QC: **Date:** **SPC (Y/N):** **Date:**

Sequence ID/ Work Center ID	Operation Description	Set Up/ Run Hours	Tool ID	Tool #	Plan Code	Accept Qty	Reject Qty	Reject Number	Insp. Stamp
Draw Nbr	**Revision Nbr**								
D3414	Rev C								
100		0.00							
100 Waterjet	**Memo**	0.00				24	0		JM14-03-1
FLOW CNC Waterjet	1-Cut as per Dwg D3414-1 Dwg Rev: C Prog Rev: C 2-Deburr if necessary								
110	QC2- Inspect parts off machine FAI/FAIB	0.00							
110 QC	**Memo**	0.00				24	0		JM14-03-1
Quality Control									

Work Order ID 113173 *113173*

February-12-14 8:48:39 AM

Item ID: D3414-041 Accept *N9000040100* Setup Start *NS1*

Revision ID: Stop *NS2*

Item Name: Lug

Start Date: 2/10/14 **Start Qty:** 24.00 *24* **Cust Item ID:**

Required Date: 2/10/14 **Req'd Qty:** 24.00 *24* **Customer:**

Reference:

Run Start *NR1*

Stop *NR2*

Approvals: **Process Plan:** _____ **Date:** _____ **Tooling:** _____ **Date:** _____

QC: _____ **Date:** _____ **SPC (Y/N):** _____ **Date:** _____

Sequence ID/ Work Center ID	Operation Description	Set Up/ Run Hours	Tool ID	Tool #	Plan Code	Accept Qty	Reject Qty	Reject Number	Insp. Stamp
120	QC8- Inspect parts - second check	0.00				24			
120									
QC	Memo	0.00 14/3/3							
Quality Control									
130		0.00							14/03/03
130				DAS 30 ~~9-89~~		24			
Brake NC	Memo	0.00							
Brake NC	1-Deburr 2-Form using DT8254 as per Dwg D3414								
140		0.00			5				14-03-05
140									
Large Fab	Memo	0.00							
Large Fab	1- Weld using location Jig DT9625 as per Dwg D3414 A/R S.S. welding rod Batch: 120854								

Work Order ID 113173

February-12-14 8:48:39 AM

113173

Item ID: D3414-041 **Accept** *N900040100* **Setup Start** *NS1*

Revision ID: **Stop** *NS2*

Item Name: Lug

Start Date: 2/10/14 **Start Qty:** 24.00 *24* **Cust Item ID:**

Required Date: 2/10/14 **Req'd Qty:** 24.00 *24* **Customer:**

Reference:

Run Start *NR1*

Stop *NR2*

Approvals: **Process Plan:** _____ **Date:** _____ **Tooling:** _____ **Date:** _____

QC: _____ **Date:** _____ **SPC (Y/N):** _____ **Date:** _____

Sequence ID/ Work Center ID	Operation Description	Set Up/ Run Hours	Tool ID	Tool #	Plan Code	Accept Qty	Reject Qty	Reject Number	Insp. Stamp
150	QC9- Inspect visual per QSI004- Fusion Welds	0.00							DAS 9 9-89
150 QC Quality Control	Memo	0.00				(5)	14.03.06		
160	QC5- Inspect part completeness to step on W/O	0.00							DAS 9 9-89
160 QC Quality Control	Memo	0.00				(5)	14.03.06		
~~170~~ 175 *170* Powdercoat Powder Coating	~~White Gloss(Ref.4.3.5.1) per~~ QSI005 4.3-Alum Spray paint Memo START TIME: OVEN TEMPERATURE: FINISH TIME:	0.00 Prime B 126022 DelFleet Blue B 126437 DelFleet Clear B 171703 0.00				5	∅	0	AS 14-3-14

Work Order ID 113173
February-12-14 8:48:39 AM

113173

Item ID: D3414-041
Revision ID:
Item Name: Lug

Accept *N900040100*

Setup Start *NS1*
Stop *NS2*

Start Date: 2/10/14 **Start Qty:** 24.00 *24*
Required Date: 2/10/14 **Req'd Qty:** 24.00 *24*
Reference:

Cust Item ID:
Customer:

Approvals: **Process Plan:** _____ **Date:** _____ **Tooling:** _____ **Date:** _____
QC: _____ **Date:** _____ **SPC (Y/N):** _____ **Date:** _____

Run Start *NR1*
Stop *NR2*

Sequence ID/ Work Center ID	Operation Description	Set Up/ Run Hours	Tool ID	Tool #	Plan Code	Accept Qty	Reject Qty	Reject Number	Insp. Stamp
180	QC3- Inspect Part Finish	0.00							
180	QC14					RT	14-03-15		(55)
QC	Memo	0.00							
Quality Control									
190	Identify as per dwg & Stock Location:_____	0.00				DAS 32 ~~9-89~~	14/3/17		(5)
190									
Packaging	Memo PNP 114453	0.00							
Packaging									
200	QC21- Final Inspection - Work Order Release	0.00							
200						MLJ	14-03-17		
QC	Memo	0.00							
Quality Control									

CL 14.0317

Picklist Print

February-12-14 8:48:42 AM

Work Order ID: 113173

113173

Parent Item: D3414-041

D3414-041

Parent Item Name: Lug

Start Date: 2/10/14 **Required Date:** 2/10/14

Start Qty: 24.00 **Required Qty:** 24.00

Comments: IPP A05.09.13New issueKJ/JLM

Component Item ID/ Item Name	Replacement Item ID	Mfg/ Purch	Bin Item	Primary Location	Last Location	Route Seq ID	Unit of Measure	Qty on Hand	Qty per Kit	Total Qty	Qty Issued	Date Issued	Status
M304S12GA		Purchased	No			100	sf	124.6300	0.155	4			
M304S12GA									**				Jm14-03-1
304/316 0.100" Sheet													
				Location		**Loc Qty**		**Loc Code**					
				MAT019		124.63							
					113062	76.13							
					113077	19							
					m126309	29.5				126309			
D3414-3		Manufactured	No			140	Each	48.0000	1	24			
D3414-3									**				14-03-05 JBC
Lug													
				Location		**Loc Qty**		**Loc Code**					
				WA001		48							
					106695	8				5			
					111462	40							

DART AEROSPACE LTD	Work Order:	113173
Description: Lug Bracket	Part Number:	D3414-1
Inspection Dwg: D3414 Rev: C		Page 1 of 1

FIRST ARTICLE INSPECTION CHECKLIST

[X] First Article [X] Prototype

Drawing Dimension	Tolerance	Actual Dimension	Accept	Reject	Method of Inspection	Comments
Ø0.313	+0.006/-0.001	0.314"	–			JMQ
1.19	+/-0.030	1.197"	–			
1.00	+/-0.030	1.005"	–			
3.38	+/-0.030	3.381"	–			
5.350	+/-0.010	5.353"	–			
6.23	+/-0.030	6.240"	–			
2.500	+/-0.010	2.504"	–			
0.37	+/-0.030	0.37"	–			
0.100	+/-0.010	0.102"	–			

Measured by:	Jm	Audited by:		Prototype Approval:	N/A
Date:	14-03-1	Date:	14/3/1	Date:	N/A

Rev	Date	Change	Revised by	Approved
A	08.02.28	New Issue P/O D3414-041	KJ/DD	
B	09.05.27	Dimensions updated per Dwg Rev B	KJ	
C	09.10.16	Dwg Rev updated to Rev C	KJ	

ITEM No.	QTY. -041	PART NUMBER	DESCRIPTION
1	X	D3414-041	LUG ASSEMBLY
2	1	D3414-1	LUG BRACKET
3	1	D3414-3	LUG

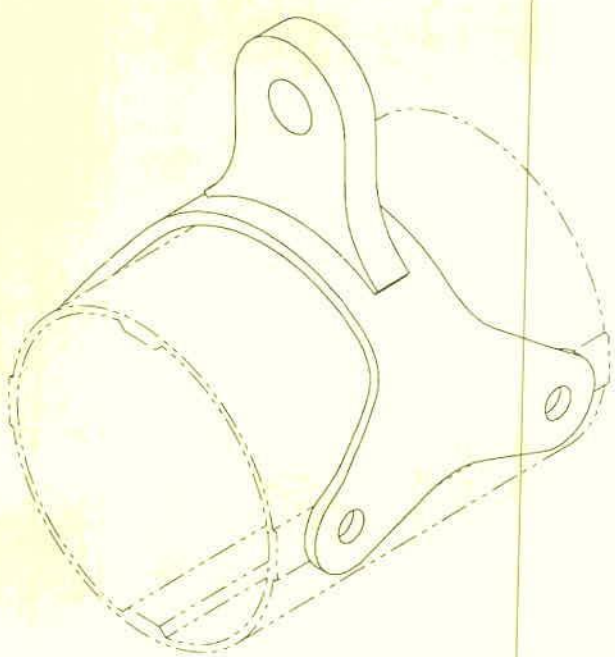

D3414-041 LUG ASSEMBLY

113173 MCJ
14-02-14

RELEASED
5/16/06 DCM

NOTES:
1) MATERIAL: N/A
2) FINISH: POWDER COAT WHITE (4.3.5.2) PER DART QSI 005 4.3
3) TOLERANCES: PER DART QSI 018 UNLESS OTHERWISE NOTED
4) UNITS: INCHES UNLESS OTHERWISE NOTED
5) BREAK SHARP EDGES: 0.005 TO 0.010 MAX
6) IDENTIFICATION: IDENTIFY WITH DART P/N "D3414-041" USING FINE POINT PERMANENT INK MARKER
7) WEIGHT: 0.52 lbs

REV	DESCRIPTION	BY	DATE
C	BREAK SHARP EDGES FOR -3 NOW 0.030-0.060 WAS 0.010-0.030 (ZN A7-3)	CP	09.06.17
B	DRAWING REDRAWN IN SOLIDWORKS WITH CURRENT STANDARDS AND TRANSFERED TO "B" SIZE BORDER. FLAT PATTERN FOR -1 INCREASED IN LENGTH TO PREVENT FOULING AT INSTL (SEE PAR198). FLAT SPOTS REMOVED FROM -1 (PART NOW "U" SHAPED) FOR EASE OF MANUFACTURE. B7-3 ADDED TOLERANCE TO 3.230 DIM. C2-3 1.12 DIM WAS 1.20	AJS	08.09.23
A	NEW ISSUE	CP	05.03.16

DESIGN	CP	**DART AEROSPACE LTD** HAWKESBURY, ONTARIO, CANADA
DRAWN	CP	
CHECKED		DRAWING NO. D3414 — REV. C — SHEET 1 OF 3
MFG. APPR		
APPROVED		TITLE: LUG ASSEMBLY — SCALE: NTS
DE APPR		
DATE	09.06.17	

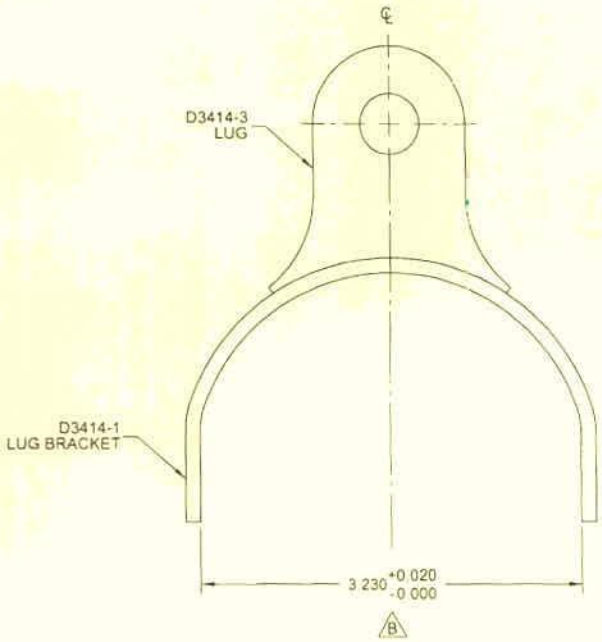

D3414-041 LUG ASSEMBLY

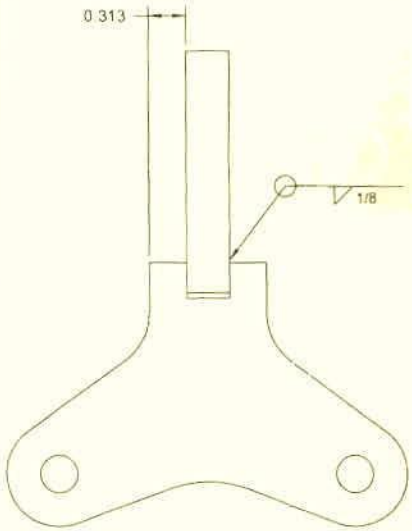

RELEASED

DESIGN	CP	**DART AEROSPACE LTD** HAWKESBURY, ONTARIO, CANADA
DRAWN	CP	
CHECKED		DRAWING NO D3414 — REV. C — SHEET 2 OF 3
MFG. APPR		
APPROVED		TITLE LUG ASSEMBLY — SCALE N°S
DE APPR		
DATE	09.06.17	

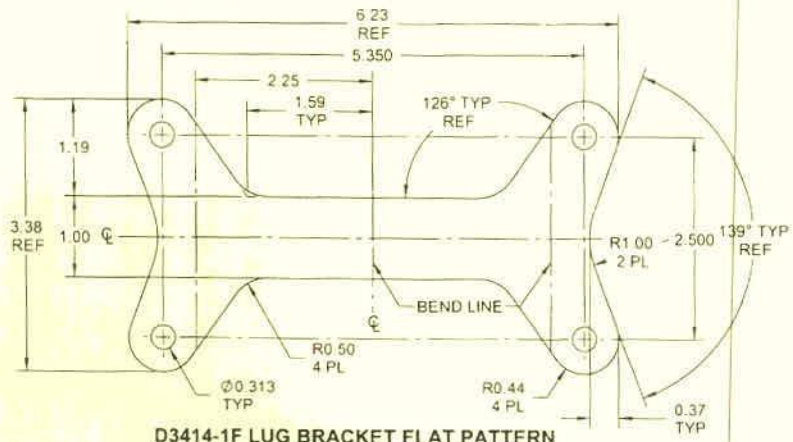

D3414-1F LUG BRACKET FLAT PATTERN

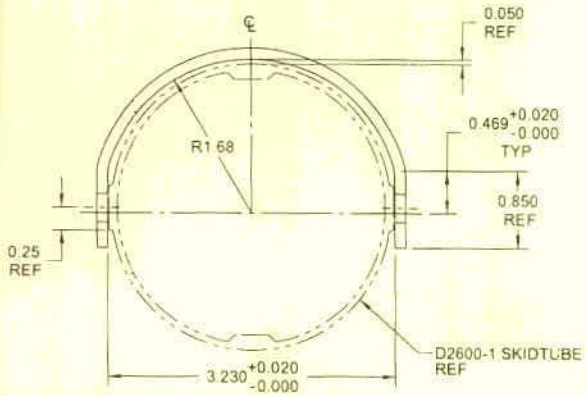

D3414-1 LUG BRACKET

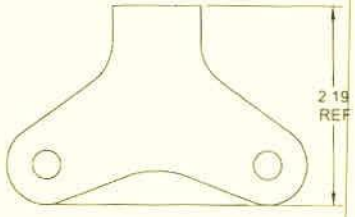

SIDE VIEW FOR REF ONLY

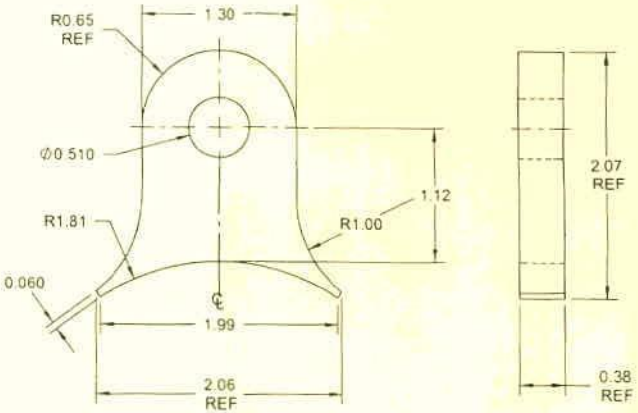

D3414-3 LUG

NOTES:
1) MATERIAL: -1: AISI 304/316 STAINLESS STEEL SHEET, 12 GAUGE (0.100 THICK)
PER MIL-S-5059 (ANNEALED) 2B FINISH OR AMS 5513/5524
REF. DART SPEC. M304S12GA

-3: AISI 304/316 STAINLESS STEEL PLATE
PER MIL-S-5059 (ANNEALED) 2B FINISH OR AMS 5513/5524
REF. DART SPEC. M304S
2) FINISH: N/A
3) TOLERANCES: PER DART QSI 018 UNLESS OTHERWISE NOTED
4) UNITS: INCHES UNLESS OTHERWISE NOTED
5) BREAK SHARP EDGES: -1: 0.010 TO 0.020 MAX
-3: 0.030 TO 0.060 MAX
6) IDENTIFICATION: N/A
7) WEIGHT: N/A

RELEASED

DESIGN	CP	**DART AEROSPACE LTD** HAWKESBURY, ONTARIO, CANADA
DRAWN	CP	
CHECKED		DRAWING NO. D3414 — REV. C — SHEET 3 OF 3
MFG. APPR.		
APPROVED		TITLE: LUG ASSEMBLY — SCALE: NTS
DE APPR.		
DATE	09.06.17	